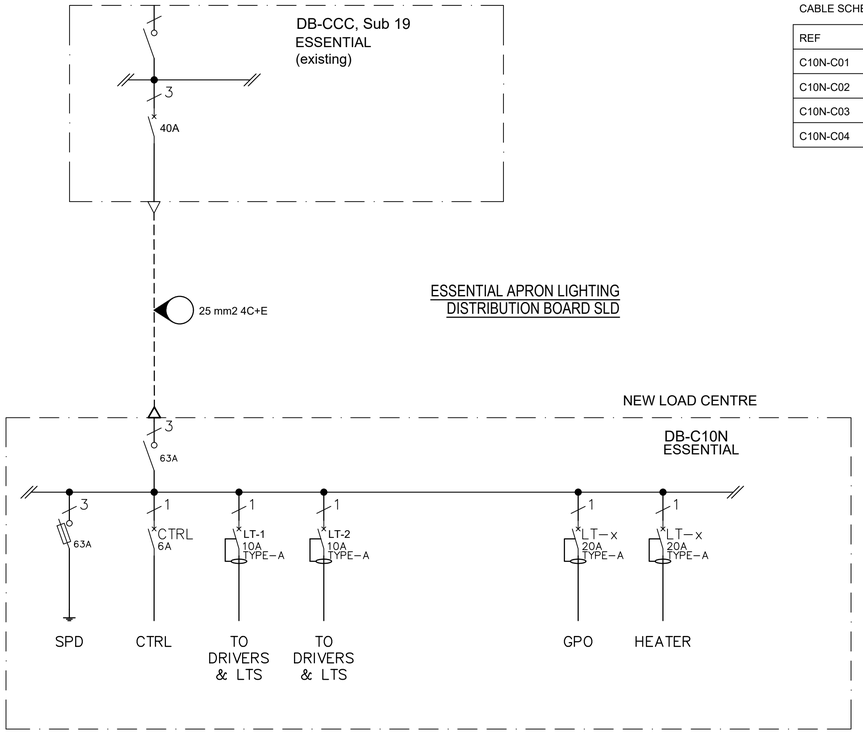

CABLE SCHEDULE - new luminaire finals (board terminals -> mast head)

REF	FROM	TO	CABLE	LEN
C10N-C01	DB terminals	Lum 1 (ESS)	2.5mm2 3C+E Cu X-90	50 m
C10N-C02	DB terminals	Lum 2 (ESS)	2.5mm2 3C+E Cu X-90	50 m
C10N-C03	DB terminals	Lum 3 (NE)	2.5mm2 3C+E Cu X-90	50 m
C10N-C04	DB terminals	Lum 4 (NE)	2.5mm2 3C+E Cu X-90	50 m

NOTES

1. ALL DISTRIBUTION BOARDS AND CIRCUIT PROTECTION SHOWN ON THIS DRAWING ARE EXISTING UNLESS NOTED OTHERWISE. REFER TO INDIVIDUAL CIRCUIT LABELS FOR NEW/EXISTING STATUS.
2. EXISTING MEN / EARTHING ARRANGEMENT RETAINED. MEN AT THE UPSTREAM SUPPLY ONLY — NO MEN AT ANY POLE BOARD.
3. CONTRACTOR TO VERIFY EARTH FAULT LOOP Zs AT EACH POLE AND CONFIRM PROTECTION DISCONNECTION TIMES COMPLY WITH AS/NZS 3000 PRIOR TO ENERGISATION.
4. ALL FINAL LUMINAIRE SUBCIRCUITS TO BE PROTECTED BY A TYPE A RCBO, ONE PER LUMINAIRE — ACTI9 iC60, 1P+N, C10, 30 mA.
5. REMOVE THE EXISTING LUMINAIRE CABLING AND REPLACE THE LIGHTING CABLE FROM THE DRIVER TO THE LUMINAIRE. THE NEW DC RISER FROM THE BOARD TO THE MAST-HEAD LUMINAIRE IS 3C+E 2.5mm² Cu X-90. ROUTE LENGTHS VERIFIED ON SITE.
6. THE DC RISER TO BE SUPPORTED BY A CATENARY WIRE RATED TO CARRY THE FULL CABLE WEIGHT OVER THE MAST HEIGHT.
7. EACH LUMINAIRE DC RISER LANDS ON A DEDICATED SET OF LABELLED TERMINALS IN THE POLE BOARD. THE DRIVER CONNECTS TO THE RISER VIA THESE TERMINALS — NO DIRECT DRIVER-TO-LUMINAIRE CONNECTION. ALL CONNECTIONS TO BE MADE ON LABELLED TERMINALS.
8. INSULATION-RESISTANCE TESTING AT 250 V DC MAXIMUM. A 500 V TEST VOIDS THE DRIVER WARRANTY.
9. DUAL-SUPPLY BOARDS: ESSENTIAL AND NON-ESSENTIAL SECTIONS EACH HAVE THEIR OWN MAIN ISOLATOR AND SURGE PROTECTION. THE TWO SECTIONS ARE NOT PARALLELED.
10. ALL CABLE TYPES, SIZES AND ROUTE LENGTHS TO BE VERIFIED ON SITE PRIOR TO ORDERING. REFER CABLE SCHEDULE FOR CABLE DETAILS. ALL WORK TO COMPLY WITH AS/NZS 3000 AND AS/NZS 3008.
11. INSTALL NEW SPD (SCHNEIDER ACTI9 iPRF1 12.5r, TYPE 1+2), SUPPLIED VIA A DIN-MOUNTED ACTI9 HRC FUSE CARRIER, ONE PER SECTION.
12. NEW ACTI9 L-SERIES METAL LOAD CENTRE OR APPROVED EQUIVALENT, IP40, INSTALLED IN THE RETAINED CABINET, ONE PER ESS/NE CUBICLE.
13. NEW LOAD CENTRE TO DISTRIBUTE CONNECTIONS FROM A 3-PHASE ACTI9 COMB BUSBAR, ALTERNATING L1/L2/L3 SO THE LUMINAIRES PHASE-BALANCE.
14. iCT 25A 4P CONTACTORS AND iC60N C6 CONTROL MCB. EXISTING CONTROL SCHEME (PE CELL, ASTRO TIMER, RELAY, HOA + OVERRIDE) RETAINED; CONTACTORS REPLACED.

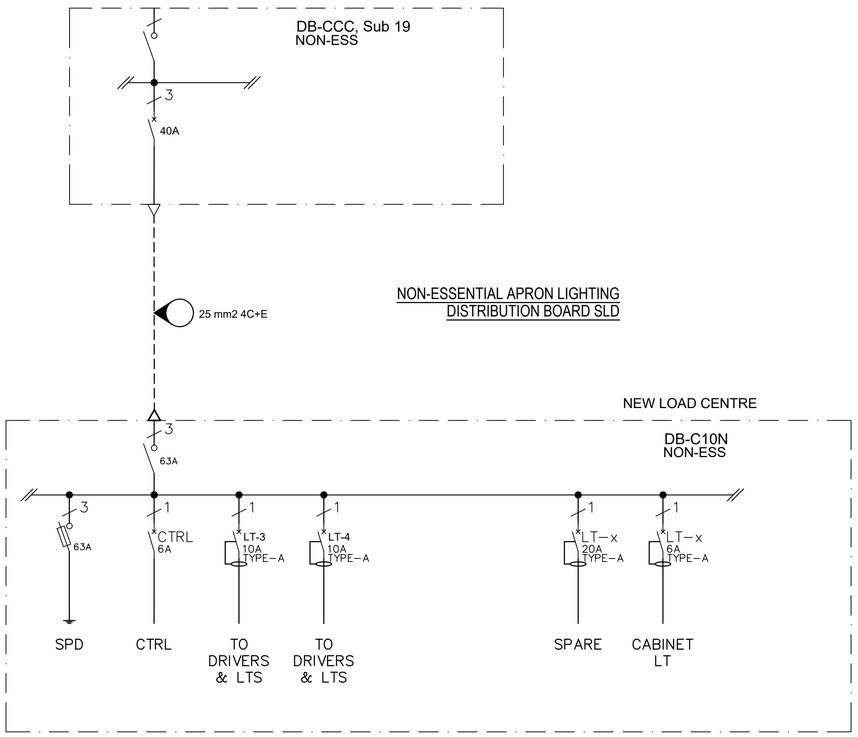

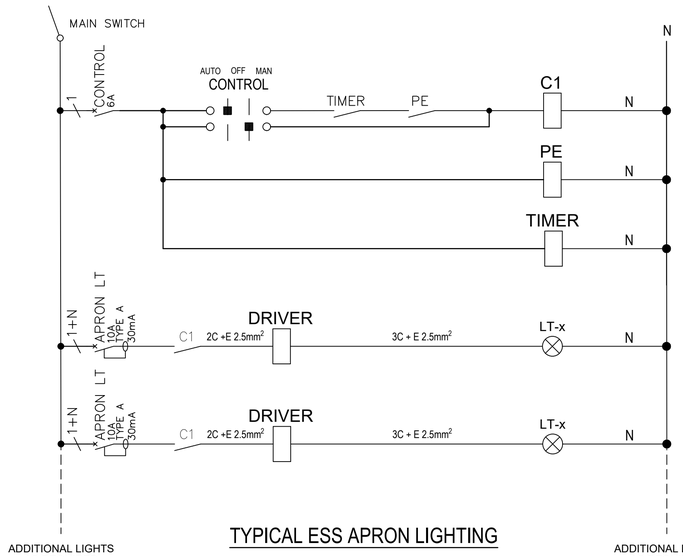

TYPICAL ESS APRON LIGHTING

CONTROL

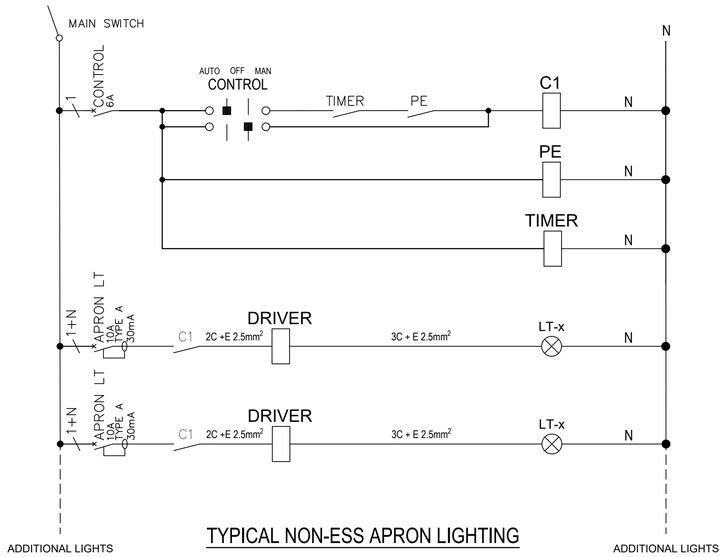

TYPICAL NON-ESS APRON LIGHTING

CONTROL

COPYRIGHT :
REPRODUCTION OF WHOLE OR PART OF THIS DOCUMENT CONSTITUTES AN INFRINGEMENT OF COPYRIGHT. THE INFORMATION, IDEAS AND CONCEPTS CONTAINED IN THIS DOCUMENT ARE CONFIDENTIAL. THE RECIPIENT(S) OF THIS DOCUMENT IS PROHIBITED FROM DISCLOSING SUCH INFORMATION IDEAS AND CONCEPTS TO ANY PERSON WITHOUT THE PRIOR WRITTEN CONSENT OF THE RELEVANT AUTHORITY

DRN	AMENDMENTS	DATE	REV
JP	ISSUED FOR REVIEW - 80% DESIGN	10/07/26	A

EMPOWER3D
Turning Complexity into Clarity

OPTIMISE ENERGY SOLUTIONS

Drawn
J.PATMAN

Design Coordinated
J.PATMAN

Authorised For Issue
J.PATMAN

MELBOURNE AIRPORT APRON LIGHTING UPGRADE PROJECT

ELECTRICAL SCHEMATICS AND LAYOUT

DB-C10N

MELBOURNE AIRPORT

MELBOURNE AIRPORT
TERMINAL 4 - ARRIVAL DR
MELBOURNE AIRPORT
VIC 3045 AUSTRALIA
T +61339297 1600
W MELBOURNEAIRPORT.COM.AU

Scale N.T.S
Size A1
Revision A

Drawing Number	Project No.	Originator	Volume	Level	Type	Discipline	Number
	CP24163-	E3D	- 01	- 01	- DR-	EL	-100118