NOTES

1. ALL DISTRIBUTION BOARDS AND CIRCUIT PROTECTION SHOWN ON THIS DRAWING ARE EXISTING UNLESS NOTED OTHERWISE. REFER TO INDIVIDUAL CIRCUIT LABELS FOR NEW/EXISTING STATUS.
2. EXISTING MEN / EARTHING ARRANGEMENT RETAINED. MEN AT THE UPSTREAM SUPPLY ONLY — NO MEN AT ANY POLE BOARD.
3. CONTRACTOR TO VERIFY EARTH FAULT LOOP Zs AT EACH POLE AND CONFIRM PROTECTION DISCONNECTION TIMES COMPLY WITH AS/NZS 3000 PRIOR TO ENERGISATION.
4. ALL FINAL LUMINAIRE SUBCIRCUITS TO BE PROTECTE[illegible] A RCBO, ONE PER LUMINAIRE — ACTI9 iC60, 1P+N, C10, 30 mA.
5. REMOVE THE EXISTING LUMINAIRE CABLIN[illegible] 'TING CABLE FROM THE DRIVER TO THE LUMINAIRE. THE NEW DC RISER FRO[illegible] LUMINAIRE IS 3C+E 2.5mm² Cu X-90. ROUTE LENGTHS VERIFIED ON SITE.
6. THE DC RISER TO BE SUP[illegible] RY THE FULL CABLE WEIGHT OVER THE MAST HEIGHT.
7. EACH LUMINAI[illegible] MINALS IN THE POLE BOARD. THE DRIVER [illegible] ER-TO-LUMINAIRE CONNECTION. ALL CO[illegible]
8 [illegible] HE DRIVER WARRANTY. [illegible] HEIR OWN MAIN ISOLATOR AND [illegible] ORDERING. REFER CABLE [illegible] NZS 3008. [illegible] IN-MOUNTED ACTI9 HRC FUSE [illegible] ENT, IP40, INSTALLED IN THE RETAINED CABINET, [illegible] M A 3-PHASE ACTI9 COMB BUSBAR, ALTERNATING L1/L2/L3 [illegible] ROL MCB. EXISTING CONTROL SCHEME (PE CELL, ASTRO TIMER, [illegible] NTACTORS REPLACED.

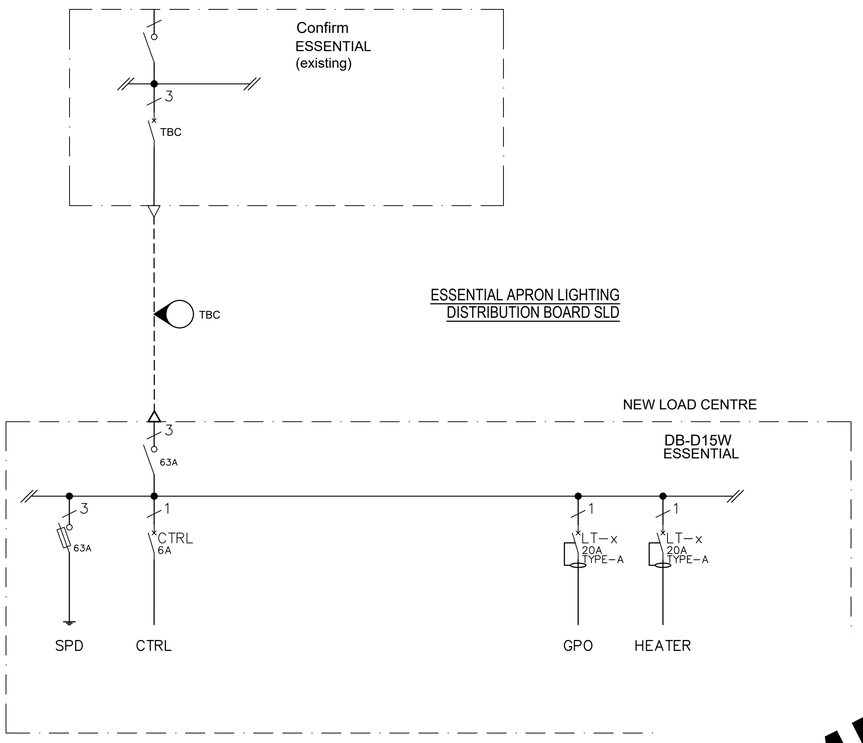

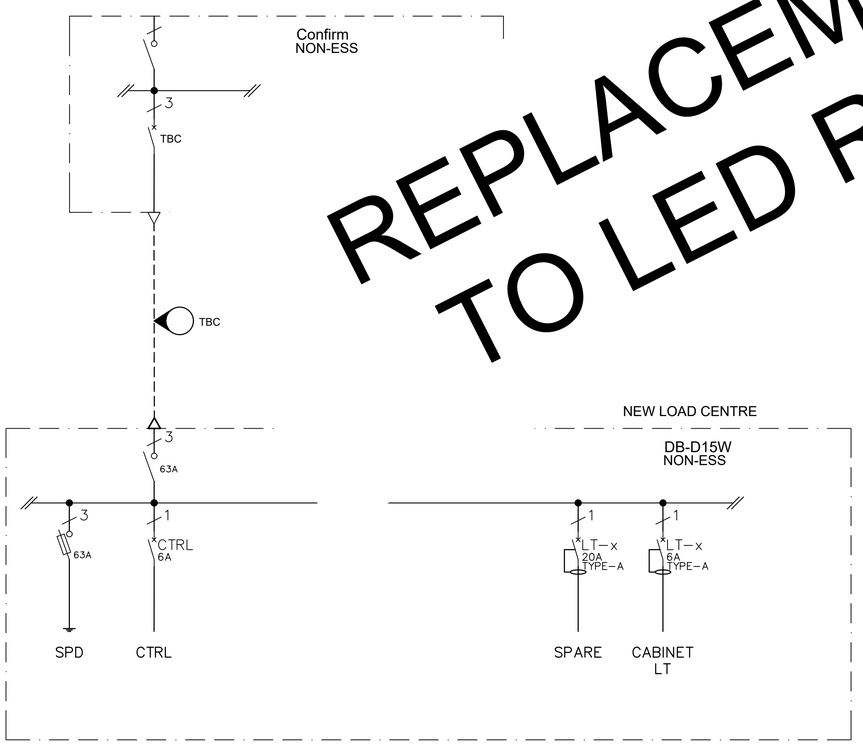

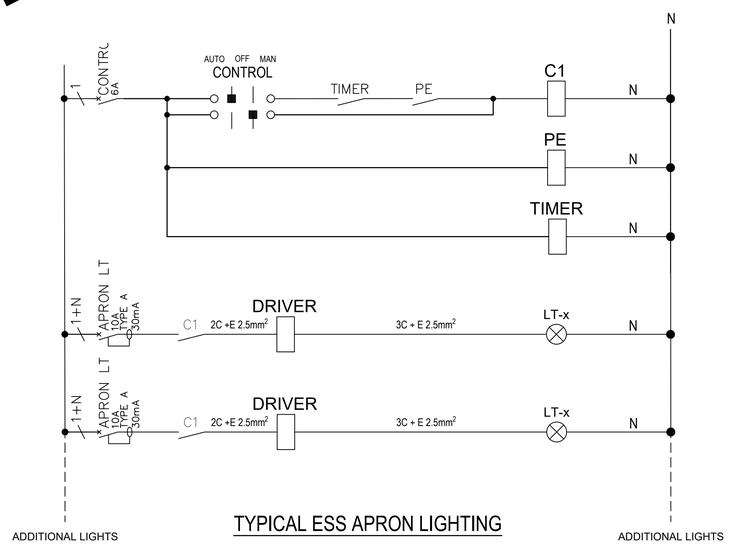

TYPICAL ESS APRON LIGHTING CONTROL

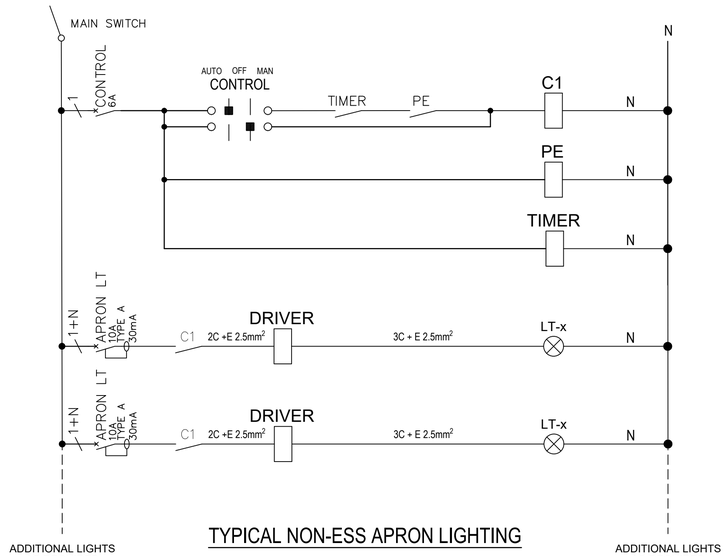

TYPICAL NON-ESS APRON LIGHTING CONTROL

REPLACEMENT REQUIRED PRIOR TO LED REPLACEMENT WORKS

COPYRIGHT :
REPRODUCTION OF WHOLE OR PART OF THIS DOCUMENT CONSTITUTES AN INFRINGEMENT OF COPYRIGHT. THE INFORMATION, IDEAS AND CONCEPTS CONTAINED IN THIS DOCUMENT ARE CONFIDENTIAL. THE RECIPIENT(S) OF THIS DOCUMENT IS PROHIBITED FROM DISCLOSING SUCH INFORMATION IDEAS AND CONCEPTS TO ANY PERSON WITHOUT THE PRIOR WRITTEN CONSENT OF THE RELEVANT AUTHORITY

DRN	AMENDMENTS	DATE	REV
JP	ISSUED FOR REVIEW - 80% DESIGN	10/07/26	A

EMPOWER3D
Turning Complexity into Clarity

OES
OPTIMISE ENERGY SOLUTIONS

Drawn
J.PATMAN

Design Coordinated
J.PATMAN

Authorised For Issue
J.PATMAN

MELBOURNE AIRPORT APRON LIGHTING UPGRADE PROJECT

ELECTRICAL SCHEMATICS AND LAYOUT

DB-D15W

MELBOURNE AIRPORT

MELBOURNE AIRPORT
TERMINAL 4 - ARRIVAL DR
MELBOURNE AIRPORT
VIC 3045 AUSTRALIA
T +61339297 1600
W MELBOURNEAIRPORT.COM.AU

Scale: N.T.S
Size: A1
Revision: A

Drawing Number	Project No.	Originator	Volume	Level	Type	Discipline	Number
	CP24163-	E3D -	01 -	01 -	DR-	EL	-100138